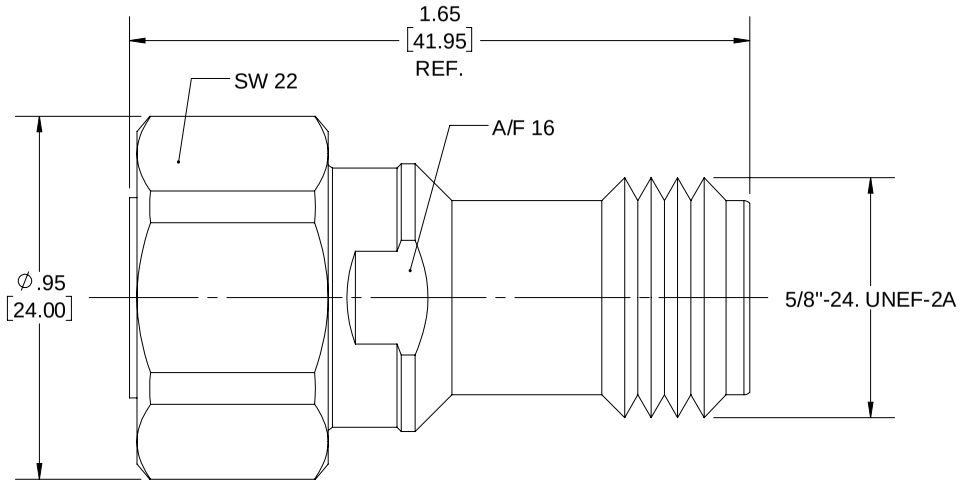


**4.3-10**
**MALE**

**N**
**FEMALE**

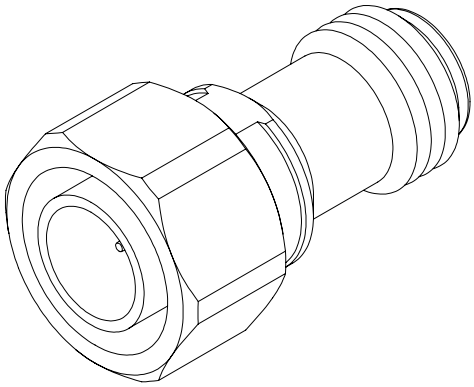

STANDARD TOLERANCES
.X Ñ0.2
.XX Ñ0.01
.XXX Ñ0.005

*STANDARD TOLERANCES APPLY ONLY TO DIMENSIONS IN INCHES

Fairview Microwave
RF COMPONENTS ON DEMAND. Done!

NOTES:
1. UNLESS OTHERWISE SPECIFIED ALL DIMENSIONS ARE NOMINAL.
2. ALL SPECIFICATIONS ARE SUBJECT TO CHANGE WITHOUT NOTICE AT ANY TIME.
3. DIMENSIONS ARE IN INCHES [mm].

| TITLE | DWG NO | CAGE CODE |
|---|---|---|
| | FMAD1174 | 3FKR5 |

| CAD FILE 12/04/18 | SHEET 1 OF 1 | SCALE N/A | SIZE A | CN2245 |
|---|---|---|---|---|