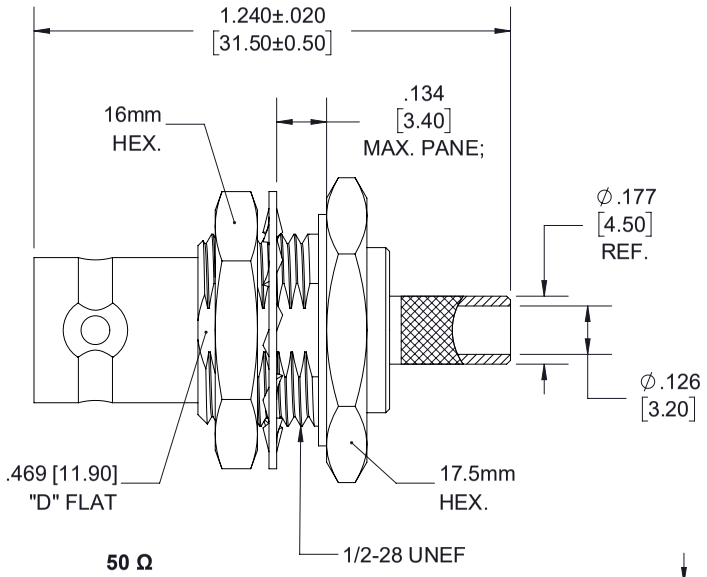

50 Ω
BNC FEMALE
BULKHEAD

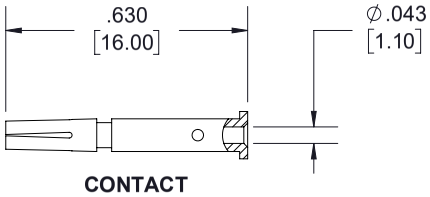

CONTACT

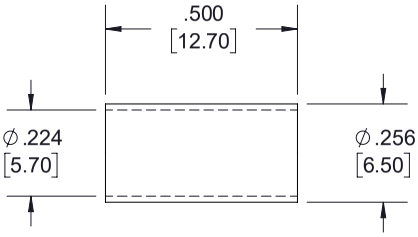

FERRULE

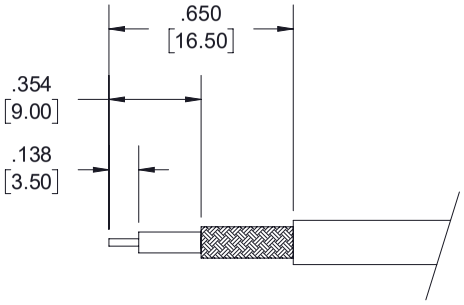

STRIPPING DIMENSIONS

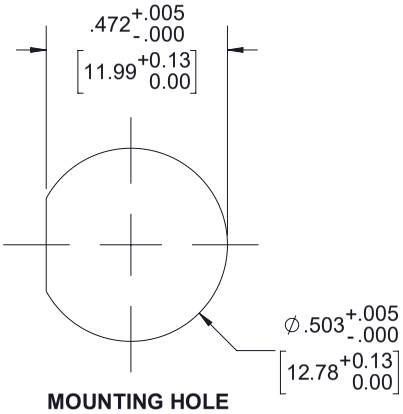

MOUNTING HOLE

NOTES:

1. CABLE ATTACHMENT:
   - OUTER: CRIMP.
   - INNER: SOLDER/CRIMP.
2. CRIMP SIZE REQUIRED:
   - FERRULE: .213 [5.41] HEX. CRIMP TOOL.
   - CONTACT: .068 [1.73] HEX. CRIMP TOOL.

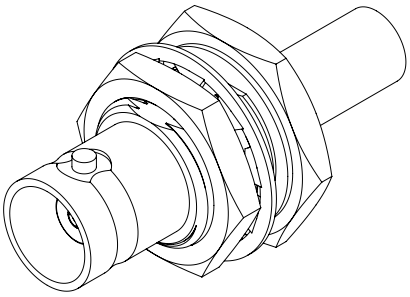

STANDARD TOLERANCES	
.X	±0.2
.XX	±0.01
.XXX	±0.005

*STANDARD TOLERANCES APPLY ONLY TO DIMENSIONS IN INCHES

Fairview Microwave
an INFINITE brand

NOTES:
1. UNLESS OTHERWISE SPECIFIED ALL DIMENSIONS ARE NOMINAL.
2. ALL SPECIFICATIONS ARE SUBJECT TO CHANGE WITHOUT NOTICE AT ANY TIME.
3. DIMENSIONS ARE IN INCHES [mm].

TITLE	DWG NO	CAGE CODE
	FMCN1571	3FKR5

CAD FILE	06/17/19	SHEET	1 OF 1	SCALE	N/A	SIZE	A	7361