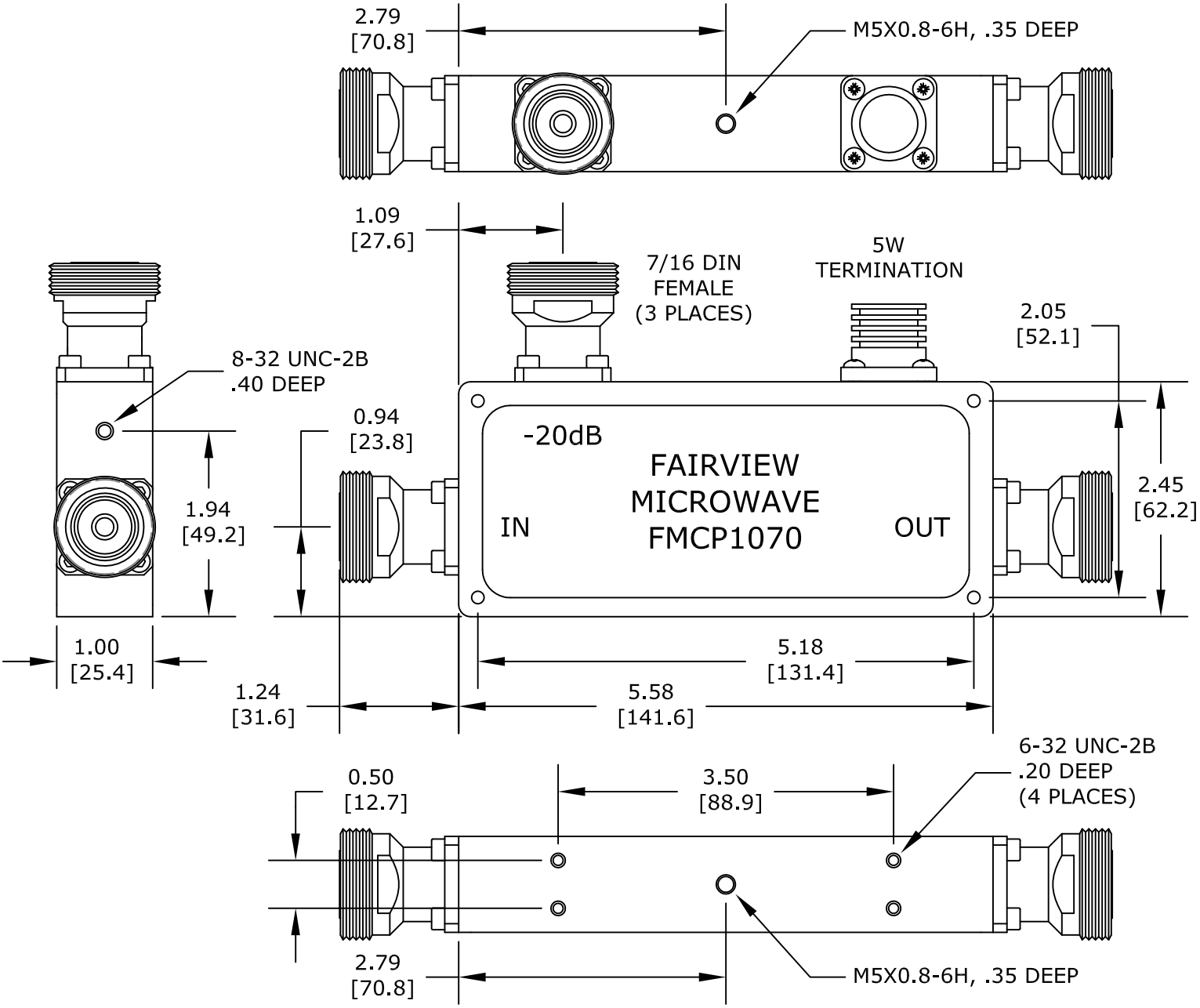

UNLESS OTHERWISE SPECIFIED:
DIMENSIONS ARE IN: inches
TOLERANCES ARE: [mm]
HOLE TOLERANCE: X.XXX ± .003 [±.076]
LENGTH TOLERANCE: X.XXX ± .010 [±.254]
LENGTH TOLERANCE: X.XX ± .030 [±.762]

* THESE DIMENSIONS AND TOLERANCES SUPERSEDE NOTE #1 ON TITLE BLOCK.

FAIRVIEW MICROWAVE INC. ALLEN, TX 75013 WWW.FAIRVIEWMICROWAVE.COM	NOTES: 1. UNLESS OTHERWISE SPECIFIED ALL DIMENSIONS ARE NOMINAL. 2. ALL SPECIFICATIONS ARE SUBJECT TO CHANGE WITHOUT NOTICE AT ANY TIME. 3. DIMENSIONS ARE IN INCHES [mm].				
TITLE	DWG NO FMCP1070		CAGE CODE 3FKR5		
	CAD FILE 060216	SHEET	SCALE N/A	SIZE A	2233