REVISION					
ZONE	REV	DESCRIPTION	DATE	CHANGED BY	APPROVED
	A	INITIAL RELEASE	05/14/2024	KGLEBOVA	SPONG

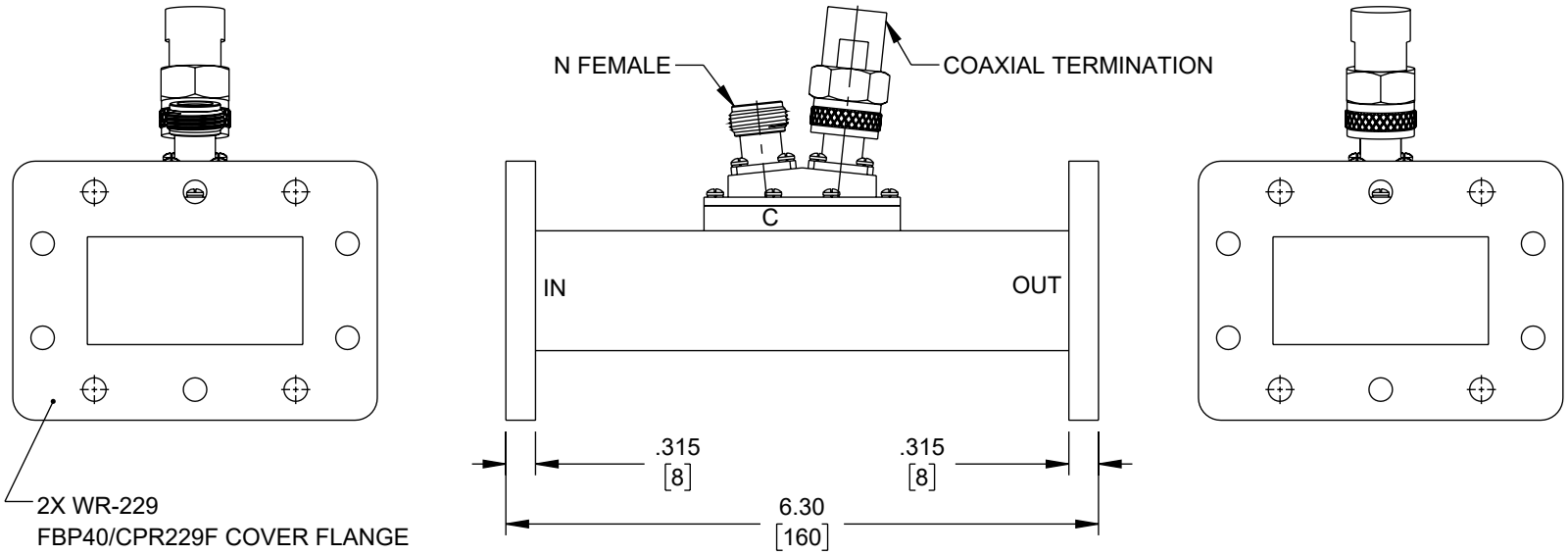

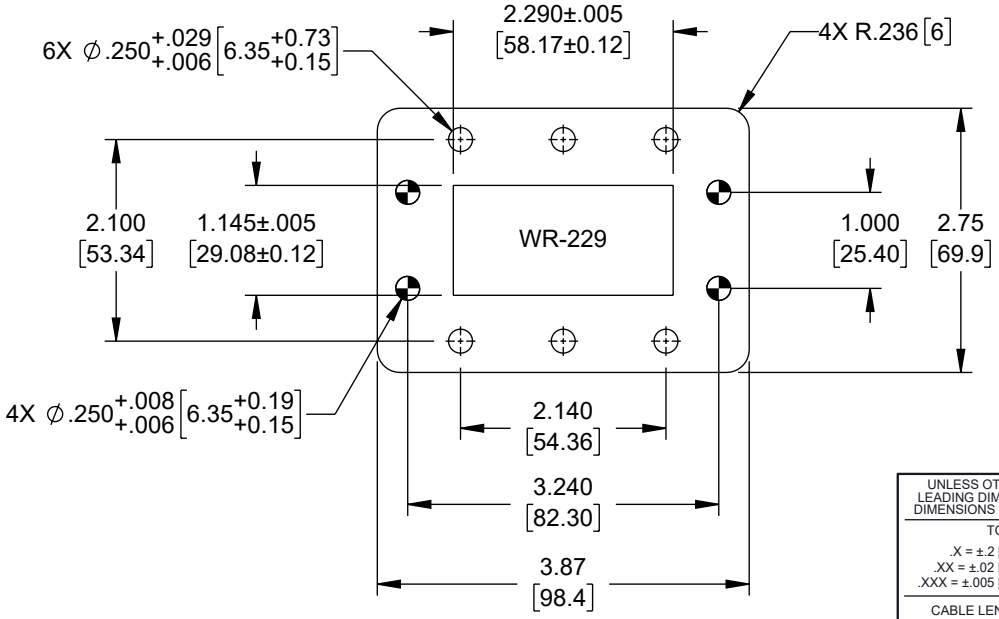

FLANGE DETAIL

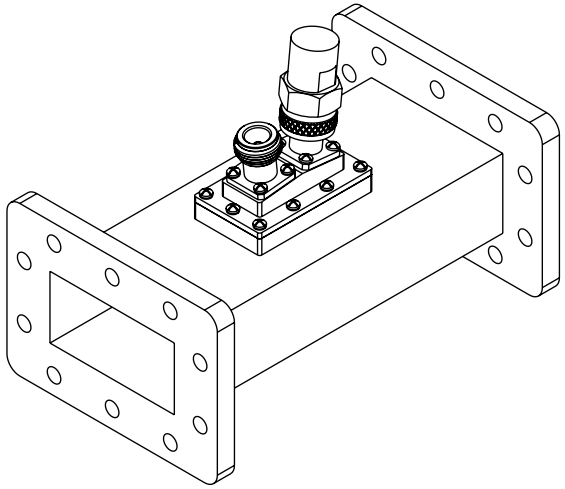

UNLESS OTHERWISE SPECIFIED
LEADING DIMENSIONS ARE INCHES
DIMENSIONS IN [ ] ARE MILLIMETERS

TOLERANCES:

.X = ±.2 [5]	FRACTIONS
.XX = ±.02 [0.5]	± 1/32
.XXX = ±.005 [0.13]	ANGLES ± 1°

CABLE LENGTH TOLERANCES:
≤12 [305] = +1 [25] / -0
>12 [305] ≤ 60 [1524] = +2 [51] / -0
>60 [1524] ≤ 120 [3048] = +4 [102] / -0
>120 [3048] ≤ 300 [7620] = +6 [152] / -0
>300 [7620] = +5% / -0

ALL DIMENSIONS ARE FOR REFERENCE ONLY AND SUBJECT TO CHANGE WITHOUT NOTICE.
UN-DIMENSIONED/NON-CRITICAL FEATURES MAY VARY IN SIZE AND LOCATION
COLORS MAY VARY

Fairview Microwave®
an INFINITE brand

Website: www.FairviewMicrowave.com
Phone: 1.800.715.4396 | 1.972.649.6678

INTERPRET ALL DIMENSIONS AND TOLERANCES PER ASME Y14.5

SCALE	SHEET
NONE	1 OF 1

DESCRIPTION
WR-229 WAVEGUIDE LOOP COUPLER, 30DB WITH N-TYPE CONNECTOR

SIZE	CAGE CODE	DRAWN BY	ITEM NO.	REV
A	3FKR5	KGLEBOVA	FMWCP1104N-30	A

THE INFORMATION CONTAINED IN THIS DRAWING IS THE SOLE PROPERTY OF INFINITE ELECTRONICS, INC. ANY REPRODUCTION IN PART OR WHOLE WITHOUT THE WRITTEN PERMISSION OF INFINITE ELECTRONICS, INC. IS PROHIBITED. THESE COMMODITIES, TECHNOLOGY OR SOFTWARE WERE EXPORTED FROM THE UNITED STATES IN ACCORDANCE WITH THE EXPORT ADMINISTRATION REGULATIONS. DIVERSION CONTRARY TO U.S. LAW PROHIBITED.

FM DS Rev-D4 Asize