SMW430AC

WR430 to SMA-F WAVEGUIDE TO COAXIAL ADAPTER

FREQUENCY: 1.70-2.60 GHZ
VSWR: 1.25:1
MATERIAL BODY: Al
MATERIAL CONNECTOR:
BODY: PASSIVATED STAINLESS STEEL
CONTACTS: BeCu Au PLATED 30µ-in

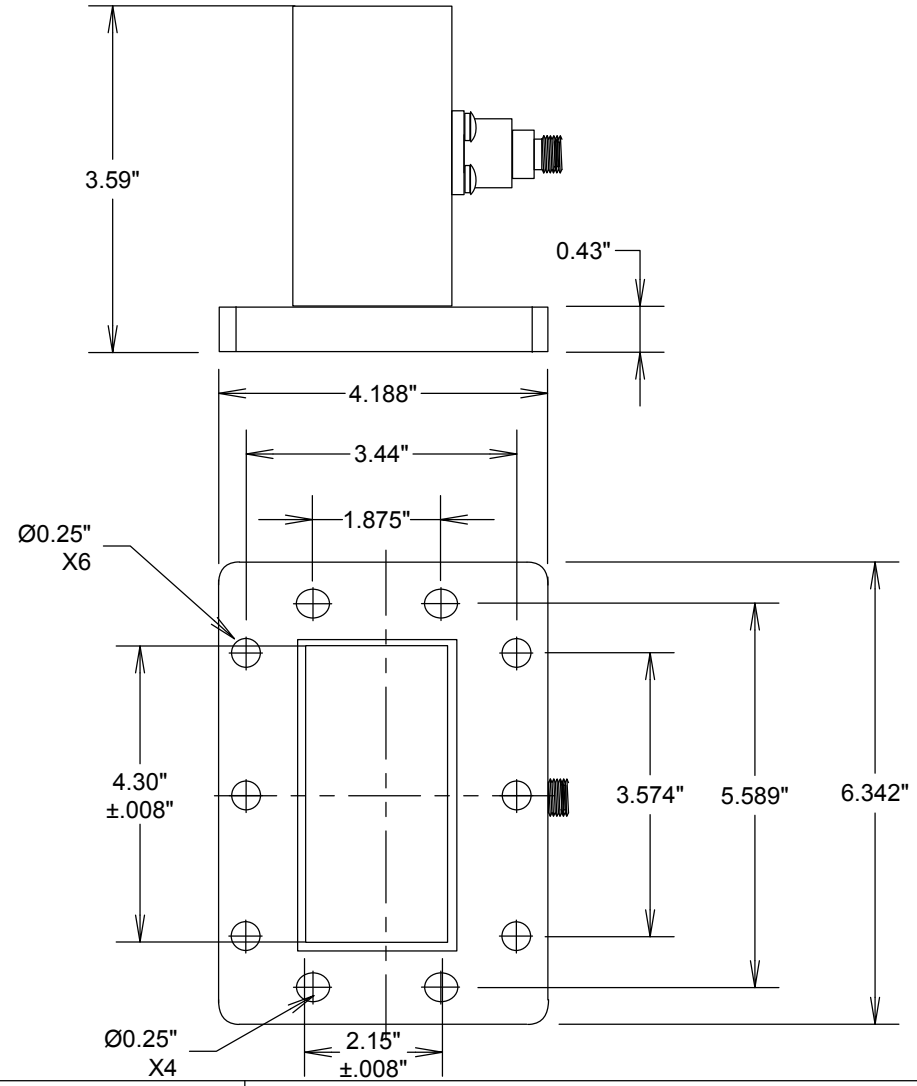

FAIRVIEW MICROWAVE INC.

ALLEN, TX 75013 WWW.FAIRVIEWMICROWAVE.COM

TITLE

WR430 to SMA-F WAVEGUIDE TO COAXIAL ADAPTER

SIZE	CAGE CODE	DWG NO	REV
A	3FKR5	SMW430AC	--

SCALE | SHEET